Nottinghamshire County Council

Timber Windows: A Sustainable Choice

Timber Windows
Historically, timber windows have always be made from quality northern European and Scandinavian woods, including oak. They have proved that when maintained they can have a lifespan as long as the buildings they belong in, often lasting hundreds of years. From the 1720s onwards pine and fir from the Baltic region of Scandinavia were used extensively for the manufacture of sash windows and casement windows, right through into the 20th century. They are often well constructed and, when maintained, are capable of providing continued high levels of service.

Why maintain & repair?
From a conservation viewpoint these windows are part of our heritage and are increasingly rare, so should be protected. Also from an environmental view point it is important to retain original windows where possible, so as to avoid creating unnecessary demand for new resources. Timber windows are often easily repaired at a fraction of the cost of replacement. This means that their embodied energy is maximised, and no new energy is used through manufacture and transport of a replacement product.

The County Council has a free guide to repairing sash windows available from the Historic Building Conservation section email: *heritage@nottscc.gov.uk*

There are a growing number of companies dedicated to restoring traditional windows. Some local joiners are prepared to repair and there are regionally based companies and some national companies, such as Ventrolla and Window Care Systems offering efficient and good service at reasonable cost.

Improving efficiency
It is possible to address some of the common complaints with regards to traditional timber windows. For instance, draught proofing systems are available that can be fitted to sash windows that will eliminate rattling and dramatically improve their thermal and noise insulation.

18th Century Sash windows in Rushcliffe make a significant contribution to this fine building.

What if the window is beyond repair?
In some cases it maybe that repair is not feasible. From a conservation viewpoint traditional style windows, like vertical sliding sashes, should be replaced on a like-for-like basis, the new windows should be replicas of the originals. This is a legal requirement in the case of a listed building, unless special consent is granted for an alternative by your local council.

Do I have to have single glazed wooden windows?

Listed Buildings:
In the case of a listed building the simple answer is 'yes'. However, there are certain occasions when the requirement for single glazing may be relaxed, depending of the individual case, such as where a modern extension is being added. However, UPVC is never considered appropriate in any part of a listed building.

Conservation Areas:
In conservation areas where an article 4 direction has been issued it may also be a requirement that you replace original wooden windows on a like-for-like basis. Check with either your local council or the county council to see if this is relevant.

In unlisted buildings and those outside conservation areas there is a requirement that replacement windows conform with thermal requirements laid out in Building Regulations (Part L). Double glazed units will be necessary to achieve these standards, however, UPVC is not a requirement.

UPVC manufacturers and salesmen make many claims for the advantages of the material over wood but these are often untrue (see 'Exploding the Myth) . Wood is actually a better natural insulator than UPVC. A double glazed timber window has all the insulation qualities of UPVC, and even a well draught proofed single glaze wooden unit has a minimally lower level of heat loss.

Unsympathetic UPVC unit

Exploding the Myth

There are growing concerns regarding some of the claims made for UPVC windows by those selling them. The most common reason it is chosen over wood for windows and doors is the issue of maintenance. We shine a light on this and other supposed benefits of UPVC by questioning some of the claims we have heard made.

'Plastic Windows are virtually maintenance free'

UPVC does not require painting to keep the rain out and is not susceptible to rot. However , it does age and it is prone to discolouration (yellowing) and brittleness. Damaged UPVC frames are un-repairable and although it is possible to paint old frames this is difficult and requires subsequent maintenance. As a result, most UPVC windows are replaced within 30 years, and often much sooner.

'Plastic windows are more secure than traditional wooden ones'

For many people this is a key factor for choosing UPVC. However, timber windows with locks fitted are actually no less secure, this is backed up by the fact that insurance providers have no interest in the material of the windows and do not offer a discounted premium for buildings fitted with UPVC.

'UPVC windows can reduce heat loss in the home by up to 40% and help with sound insulation'

This is probably the main reason people choose UPVC double glazing. The difference in reduction rates between a UPVC window and a well draught proofed timber window is actually fairly minimal. The biggest rate of heat loss in buildings is through un-insulated roof spaces. Secondary glazing can often be fitted to existing timber windows providing an alternative to brand new windows.

'Plastic windows are a much cheaper option'

New UPVC windows are cheaper than hardwood frames but softwood does not generally cost more than UPVC. However, bearing in mind the likely 30 year lifespan of UPVC, a set of good quality well maintained timber windows will be cheaper in the long run as they can easily outlast the UPVC.

'New plastic windows will add value to your property'

Research presented on a recent TV program 'The 20 Quickest Ways to Lose Money on your

Property' (2004) showed that insensitive and cheap alterations can lead to a decrease in the monetary value of you home. One of the chief culprits was plastic windows which could knock up to £12,500 of the your house price!

'Plastic windows will outlast wooden ones'

There is little truth in this. Experience shows that wooden windows can last hundreds of years if well made and maintained. This is backed up by The Green Building Digest which states that 'well designed and well maintained timber windows can and do last the lifetime of the building in which they are installed'. The National Building Federation's 'Standards and Quality in Development' indicates **UPVC frames have a life expectancy of 20 - 25 years** while the cheaper timber option, Vacuum treated-softwood, are expected to last 25 - 35 years.

The fact that many historic buildings still have their original timber windows, which can be several hundred years old, is proof of the durability of wood. An ordinary set of Victorian sash windows is made from high quality softwood (equivalent to a modern close grained wood like Douglas Fir) and could easily survive for another 100 years if treated properly and are capable of 'upgrading' to better insulation levels through the introduction of new draught proofing. Maintenance does not need to be intensive, adopting an ethos of little but often should ensure a long lifespan.

'Modern UPVC comes in a range of styles and can be sympathetic to the character of old buildings'

Though UPVC windows do now come in a range of styles, effects and even different colours they are still not considered to be sympathetic to older properties.

UPVC does not allow for the same quality of detailing as wood, for example the thickness of glazing bars and frame members is much greater in plastic. UPVC windows tend to look very flat and can always be detected as looking out of place on an older property, they are generally considered unacceptable from a conservation point of view.

'Our windows are good for the environment as they cut down on heat loss, thus saving on the burning of fossil fuels'

This is the strangest claim made. To claim UPVC is more environmentally friendly than wood is simply untrue.

The production process leads to the release of no less than 6 of the fifteen most hazardous chemicals the European governments have listed for priority elimination. Old window units are disposed of through landfill sites and incineration, both of which cause the release of these chemicals yet again at the end of the windows lifespan.

UPVC is not recyclable and usually goes to landfill sites where creates pollution as it slowly degrades.

Timber grown from a sustainable source and treated with natural oil and wax finishes is specified as the preferred option for windows and door materials by most sustainable building guides. Timber from environmentally managed forests always carries the Forest Stewardship Council's Trademark or another label from an internationally recognised certification scheme.

'From day one the wood is starting to rot and degrade the appearance of a property'

This is a rather misleading comment. From day one the wood is starting to age but not necessarily rot. Wood can season with age leading to a much longer lifespan. If the materials are treated and maintained from day one then rot will not set in.

Specifying double glazed wooden-windows

Where new wooden windows are needed either to replace unsympathetic or broke UPVC or because the original wooden windows are beyond repair, then they will need to meet modern thermal standards (according to Part L of the Building Regulations). This is difficult to achieve and at the same time retain a historically sensitive appearance to the finished windows, but there are some tips that will help (see illustrations):

1. Argon filled glazed units with 'low E' glass are much slimmer than standard vacuum filled units.
2. Minimise the width of the glazing bar (see Option A and B). Historically they were rarely fatter than 20mm.
3. Use a white spacer strip to separate the two pains of glass. This hides the tell-tale silver detail and fools the eye into believing that the windows are single glazed.
4. Choose a good quality softwood, like a Douglas Fir or Hemlock. Hardwoods from Indonesia may seem appealing and cost effective but they are quite new and their durability in the British climate has not been properly tested.

Option A: Proper glazing bar (individually glazed units)

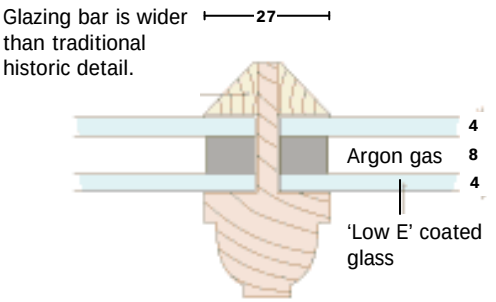

Option B: Applied Glazing Bar

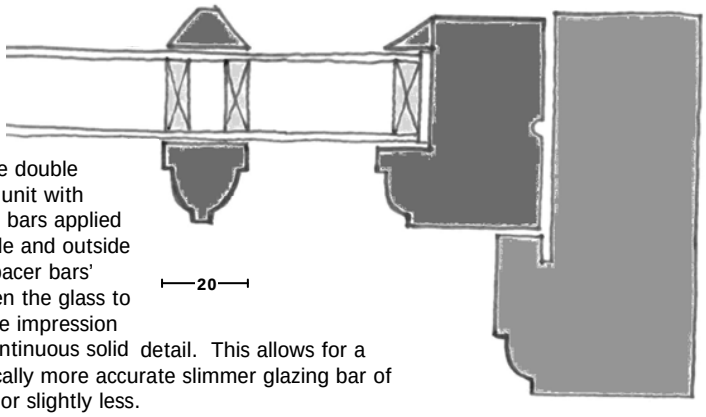

A single double glazed unit with glazing bars applied to inside and outside and 'spacer bars' between the glass to give the impression of a continuous solid detail. This allows for a historically more accurate slimmer glazing bar of 20mm or slightly less.

"Document L" double glazed Box Sash window. 'U' value 1·7.

Section through box showing weights.

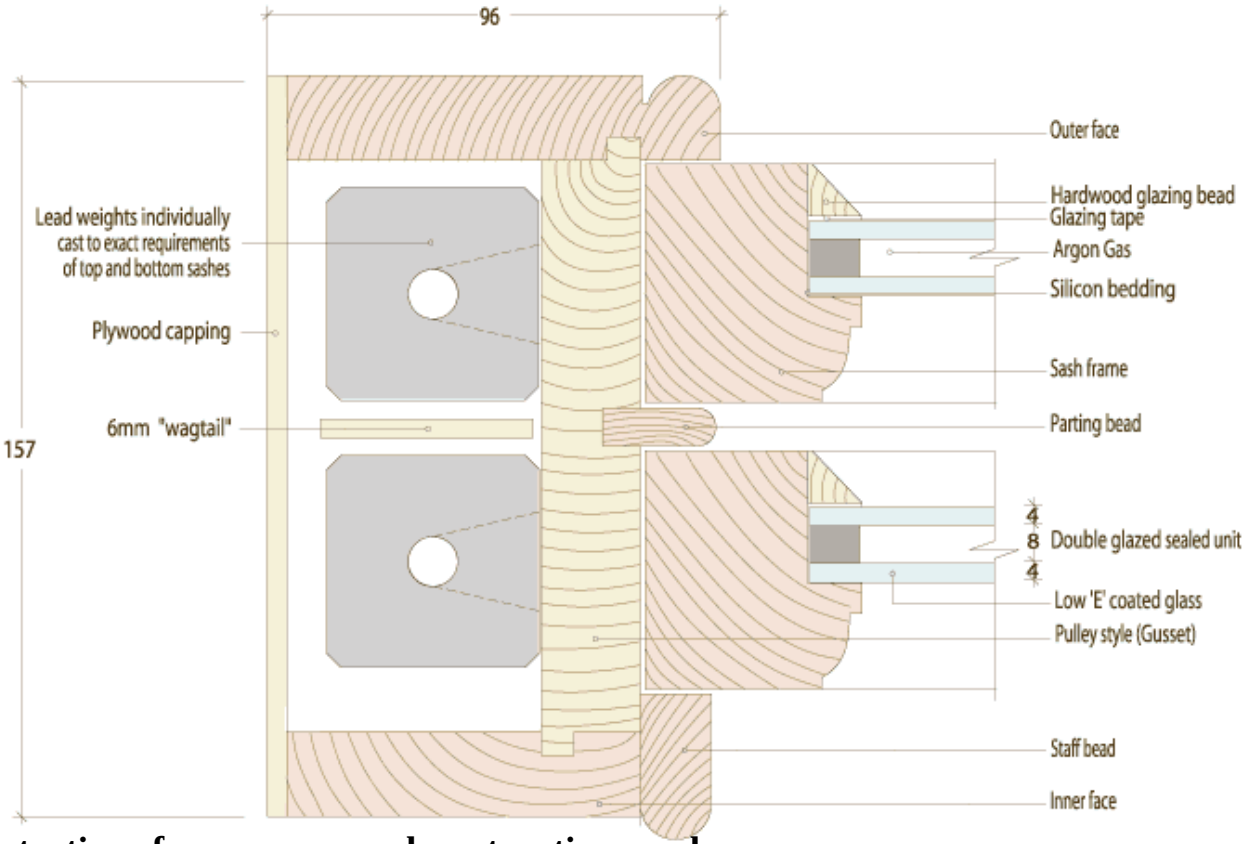

Illustrations from: www.sash-restoration.co.uk